Hygenix

micomDOOR®

AUTOMATIC DOORS

WWW.HYGENIX.IE

EN

HERMETIC DOORS

Our **MI-LAB** automatic and manual hermetic doors have been designed to guarantee the maximum safety, hygiene and hermeticity as well as providing a smooth, silent and very robust operation.
These doors are mainly used for sanitary purposes and are essential for keeping down contamination levels in rooms with a controlled environment, operating rooms, radiology rooms, clean rooms or laboratories. Thanks to their great hermeticity, MI-LAB doors are perfect for spaces that need special insulation, as for example, in industries such as pharmaceuticals, food or chemical ones.

The **MI-LAB** hermetic doors for hospitals meet all the standards required by the most rigorous European regulations, achieving their hermeticty thanks to deformable rubber systems that fit against the door frame.
Thanks to its ultra-smooth surface, it eliminates possible areas where bacteria could live, making cleaning easier and making it last longer.
As an option, a 40 x 40 cm sight glass (plumbed or normal) can be included to allow a glimpse of the interior without needing to open the door.

We have the following options available for different needs:

- HERMETIC DOORS FOR OPERATING ROOMS AND CLEAN ROOMS:
Designed and manufactured for environments where the key factors are hygiene and safety against environmental contamination. These doors save a valuable amount of space compared to hinged doors and, when they are working, they produce less air leakage. They are also suitable for environments where hygiene is a priority. In these doors, the door leaf is fully encapsulated against the frame and the floor.

- DOORS FOR RADIOLOGY ROOMS:
In addition to having the same hermetical characteristics as the previous ones, these doors offer a high degree of protection against X-rays, as they have lead foils on the inside designed just for this purpose.

- SEMI-HERMETIC SLIDING DOORS:
Designed and manufactured for environments where hygiene and safety against air contamination is important, but there is no need for complete hermeticity. These doors save a valuable amount of space compared to hinged doors and when they are working, they produce less air leakage, making them ideal for environments where hygiene is a priority. In these doors the door leaf does not fully engage with the frame and the floor.

MI-LAB Slinding door:

This door consists of a hermetically sealed sliding leaf with the following elements:

-Perimetral profiling with extruded aluminium in matt anodized finish.

- 40 mm thick insulating inner core made of high density injected polyurethane (55 Kg/m3). Through the injection of polyurethane, it is ensured the maximum adhesion between elements, generating a compact behavior of great stability and resistance.

-Possibility of adding a lead shield and a plumbed sight glass.

-Stainless steel/HPL exterior plate easy to clean suitable for hospital environments with a high resistance to the usual chemicals.

-Direct connection to the ground to discharge static electricity at any point of the course.

-Hermetical and perimetral rubber in EDPM, which provides flexibility and resistance to the compression process that facilitates cleaning.

-Hermetic frame that can be installed in one or both sides of the wall. This is optional. It is made up of vertical and horizontal aluminium systems finished in aluminium / stainless steel.

- 400x400x45 mm square window (optional) with double glass assembled in an insulated glass with a black finishing, completely hermetic and flushed with the surface.

-Exterior handlebar with tubular shape and inner recessed handlebar, finished in stainless steel; to allow the manual activation of a hermetic leaf.

-The design and manufacture meets the UNE 85170:2016 standards.

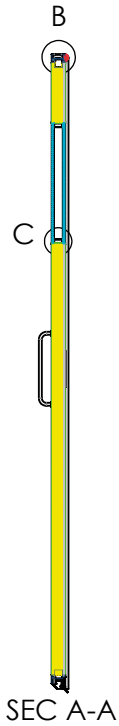

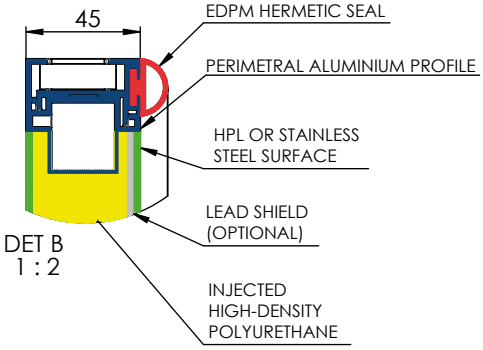

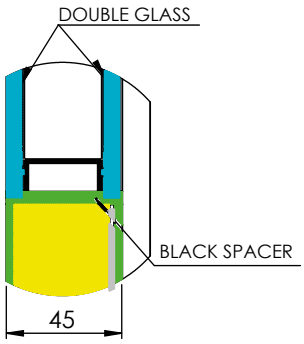

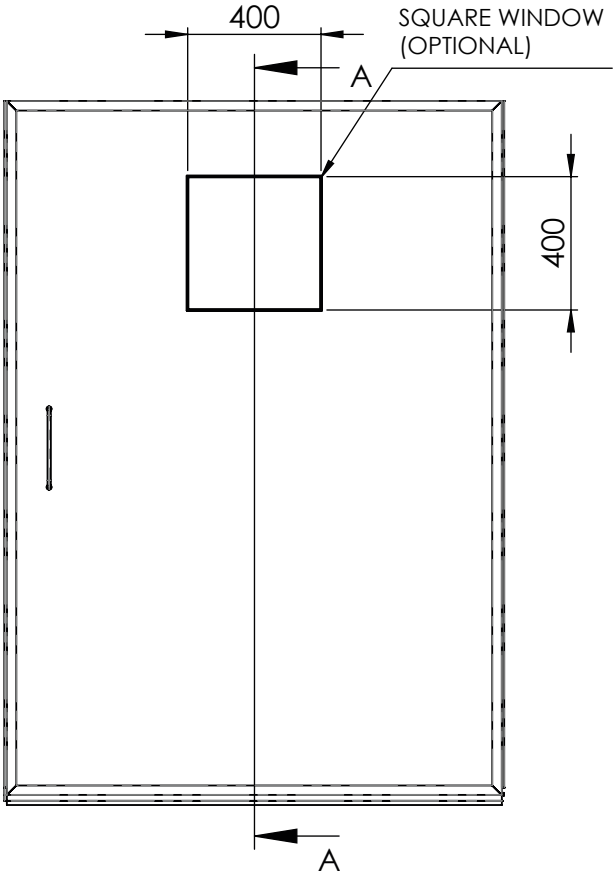

MI-LAB Swing door:

This door consists of an hermetic swing leaf composed by the following elements:

-40mm thickness perimetral profiling made of extruded aluminium, with a matt anodized finishing.

-Insulating inner core of 34 mm thick (standard) high density injected polyurethane (55 kg/m3). The injection of polyurethane ensures the maximum adhesion between the components, making the door very compact, highly stable and with resistant performance.

-Possibility of adding a lead shield and a plumbed sight glass.

-Stainless steel/HPL exterior plate easy to clean suitable for hospital environments, with high resistance to the usual chemicals.

-Direct connection to the ground to discharge static electricity at any point of the course.

-It's possible to lock with an electric lock.

-Hermetical and perimetral rubber in EDPM, which provides flexibility and resistance to the pressure process that facilitates cleaning.

-Hermetic frame made of vertical and horizontal aluminium systems finished in aluminium / stainless steel.

-400x400x40 mm square window (optional) with double glass assembled with a black-finish insulated glass, completely hermetic and flushed with the surface.

-Exterior and interior handlebar with tubular shape, and a stainless steel finishing enable the hermetic leaf to be manually operated.

-The design and the manufacture meet the UNE 85170:2016 standards.

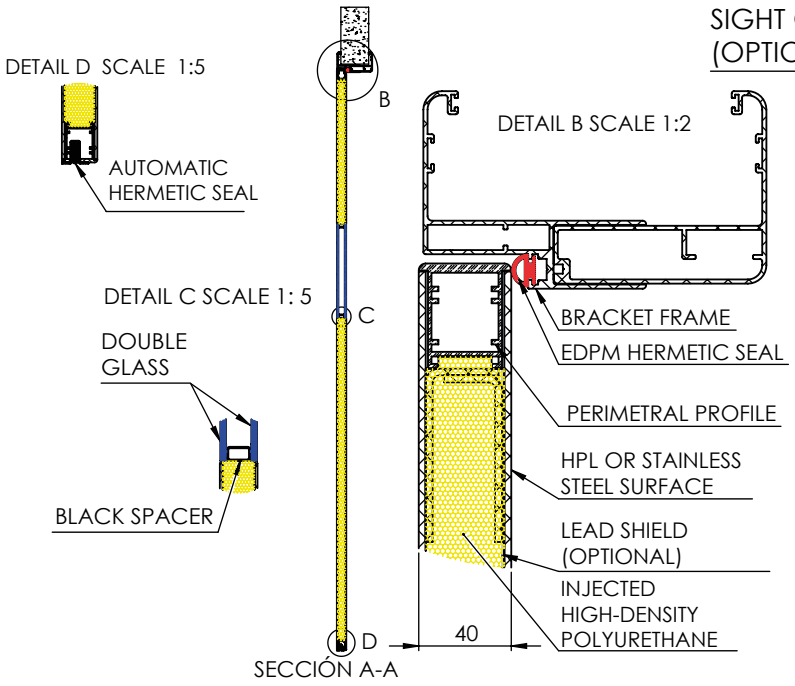

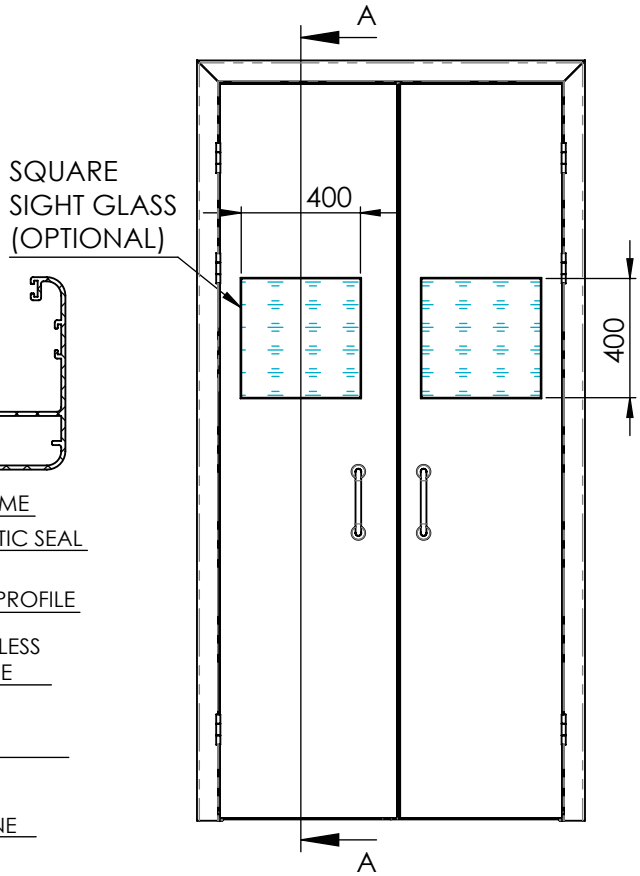

micomDOOR®

AUTOMATIC DOORS

UNIT 1 BEECH ROAD
KILBRIDE
ARKLOW CO.WICKLOW
IRELAND
help@hygenix.ie

WWW.HYGENIX.IE